Nemalux™

AR-GN
rev. A1

KEY FEATURES

- Designed for a wide range of marine and industrial applications
- Optimized thermal management of electronics for longevity
- Field serviceable light engines, power supply, and housing elements
- Multiple optical distribution patterns for superior lighting quality
- Approved for through-wiring of several units on a single circuit
- Built-in junction area for simplified termination
- 8 mounting options for installation flexibility
- Available in 90+ CRI

TECHNICAL SPECIFICATIONS / MAXIMUM RATINGS

HOUSING	Copper free aluminum and polycarbonate lens
MOUNTING	See pages 3 and 4 for MOUNTING OPTIONS
INPUT VOLTAGE	**AC:** 120-277VAC | **HV:** 347-480VAC (50/60Hz)
POWER (TYP)	See CHART on page 2
CURRENT (TYP)	See CHART on page 2
CONNECTIONS	2x 3/4" NPT
DIMMING	0-10V Dimmable, Class 1 wiring | See CHART on page 2
TEMPERATURE RANGE	**AR10, 15, 20, 25** AC Models: -40°C to +55°C **AR10, 15, 20, 25** HV Models: -40°C to +50°C **AR30** AC, HV Optical Models: -40°C to +45°C **AR30** AC Flood Model: -40°C to +40°C **AR30** HV Flood Model: -40°C to +45°C (Case ~30°C above ambient)
CERTIFICATIONS	Certified to UL 1598 & UL 1598A, UL 8750; CSA 22.2 No. 250.0, CSA 22.2 No. 250.13;
INGRESS PROTECTION	IP66/67 Suitable for wet locations. Marine outside type (salt water).
COLOUR TEMP RANGE	**50:** 5000K | **Special Order:** 2700-6500K
CRI VALUE (MIN)	**50:** 70 | **Special Order:** 90+
TOTAL LUMENS	See CHART on page 2
LUMEN MAINTENANCE	LM-80 > 100,000 hrs (Based on CREE long term testing)
WEIGHT	16.4 kg | 36 lbs

** The ambient temperature during lifetime, lumen and chromaticity determination is 25°C ± 1°C.*

DIMENSIONS

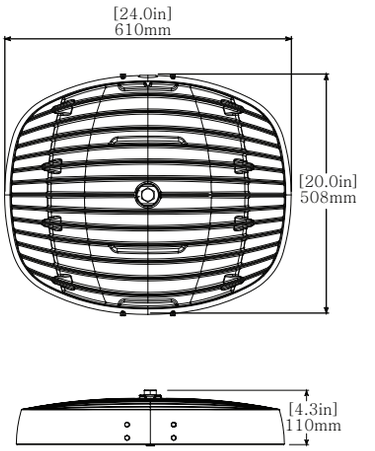

WARRANTY

Five (5) year limited warranty to the original purchaser. The warranty covers defects in materials and workmanship under normal use and service.

For additional information see:
https://nemalux.com/legal

ELECTRICAL RATINGS

AC MODELS
(5000K CCT, minimum 70CRI)
120-277 VAC Input Range
50/60 Hz Frequency

MODEL	RATED WATTAGE [Watts]	TYPICAL POWER - FLOOD MODELS [WATTS]		TYPICAL POWER - OPTIC MODELS [WATTS]	
		@120VAC	@277VAC	@120VAC	@277VAC
AR10	107	88.8	91.8	96.9	99.2
AR15	145	119.5	121.6	130.0	131.7
AR20	190	156.3	157.0	170.0	170.6
AR25	247	209.7	208.1	224.9	222.7
AR30	312	277.7	274.4	297.0	292.9

HV MODELS
(5000K CCT, minimum 70CRI)
347-480 VAC Input Range
50/60 Hz Frequency

MODEL	RATED WATTAGE [Watts]	TYPICAL POWER - FLOOD MODELS [WATTS]		TYPICAL POWER - OPTIC MODELS [WATTS]	
		@ 347VAC	@ 480VAC	@ 347VAC	@ 480VAC
AR10	129	113.0	118.3	121.9	127.0
AR15	145	135.6	140.6	145.7	150.6
AR20	187	171.5	193.8	180.5	183.3
AR25	248	224.6	228.4	238.3	241.9
AR30	310	287.3	289.5	297.6	297.4

OPTIC OPTIONS

Vertical Plane (RED) | Lateral Cone (BLUE)

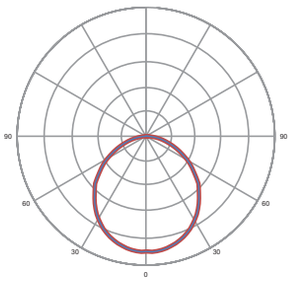

WC - Wide Beam (No Optics)

MODEL	LUMENS	LUMENS/WATT
AR10	12270	140
AR15	16490	140
AR20	20730	134
AR25	26610	129
AR30	33190	121

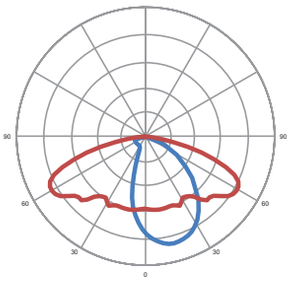

T2 - IESNA Type 2

MODEL	LUMENS	LUMENS/WATT
AR10	12370	132
AR15	16340	130
AR20	20560	125
AR25	26090	117
AR30	31670	109

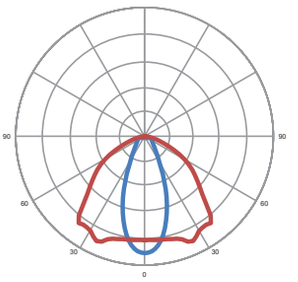

OC - Oval 26° x 108°

MODEL	LUMENS	LUMENS/WATT
AR10	12260	127
AR15	16200	127
AR20	20380	124
AR25	25860	119
AR30	31400	109

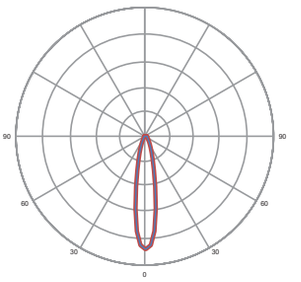

SC- Spot 18°

MODEL	LUMENS	LUMENS/WATT
AR10	12330	128
AR15	16290	128
AR20	20500	125
AR25	26020	119
AR30	31590	110

Note: 13 alternate optical profiles available upon request.
Contact Nemalux sales representative for further details. Minimum order quantities, additional costs and lead times may apply.

PHOTOMETRICS

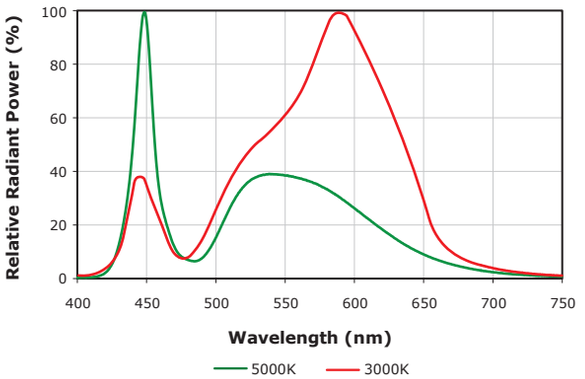

DIMMING

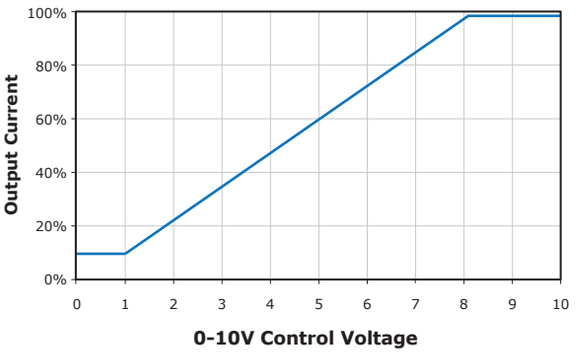

- *Driver will source a maximum of 200uA for control needs*
- *Controller must sink current from the 0-10V control leads*

MOUNTING OPTIONS (Ordered Separately)

SURFACE/SUSPENDED MOUNT (AR-SM): 16.8 kg | 37 lbs

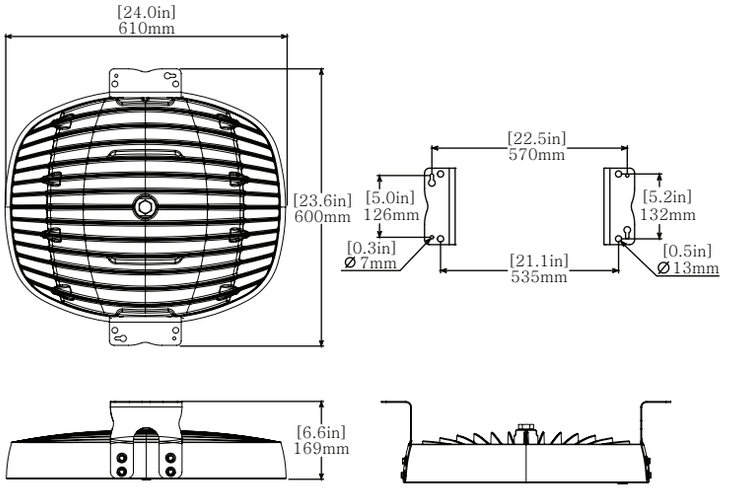

POLE MOUNT (AR-PM): 17.3 kg | 38 lbs | EPA: 0.07 m² / 0.72 ft²

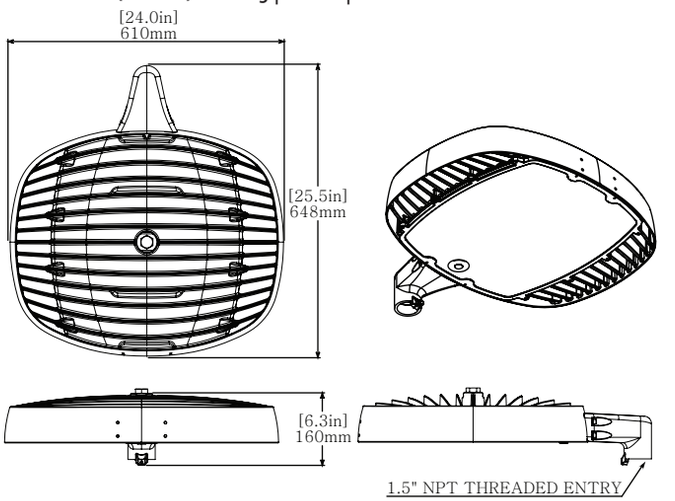

WALL MOUNT 2 (AR-WM2): 17.6 kg | 38.5 lbs

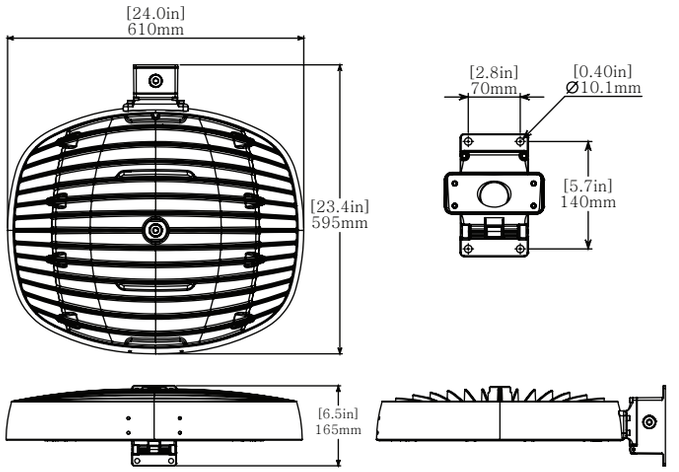

YOKE MOUNT (AR-YM): 18.0 kg | 39.6 lbs | EPA: 0.28 m² / 3.06 ft²

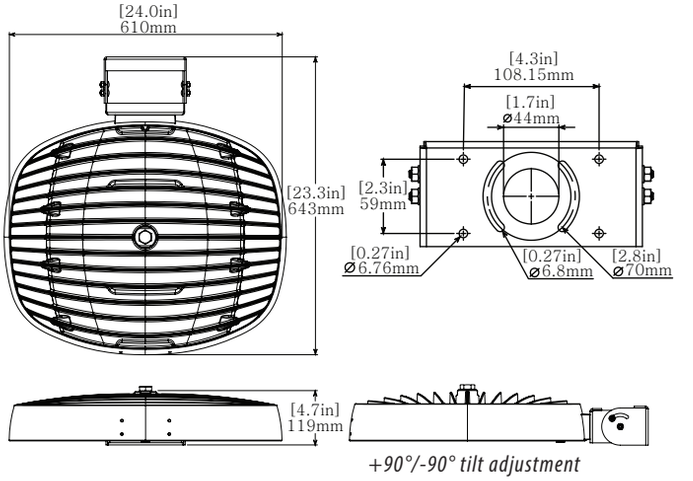

HIGH VIBRATION YOKE (AR-YK): 23.8 kg | 52.5 lbs | EPA: 0.37 m² / 3.97 ft²

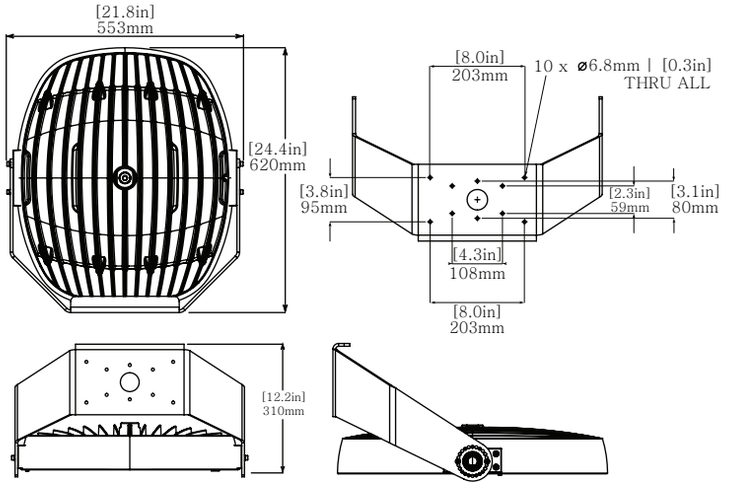

MOUNTING OPTIONS (Ordered Separately)

COUNDUIT MOUNT (AR-CM): 16.4 kg | 36 lbs

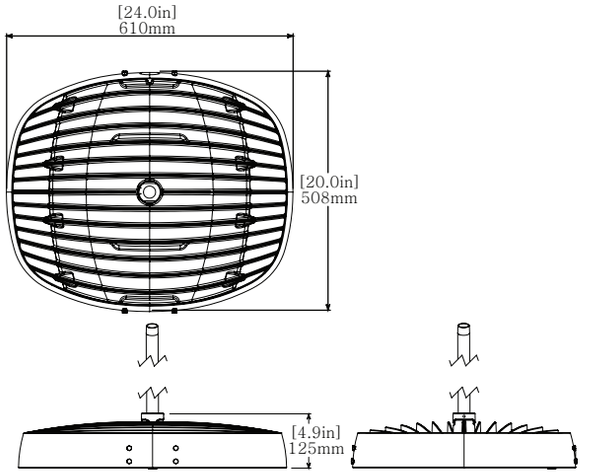

HOOK PENDANT (AR-HK): 16.8 kg | 36.9 lbs

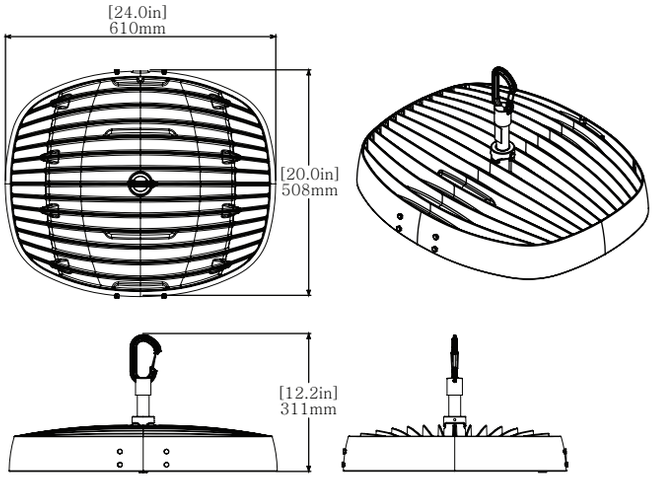

SLIP FITTER YOKE MOUNT (AR-SFY): 18.35 kg | 40.3 lbs | EPA: 0.3 m^2 / 3.24 ft^2

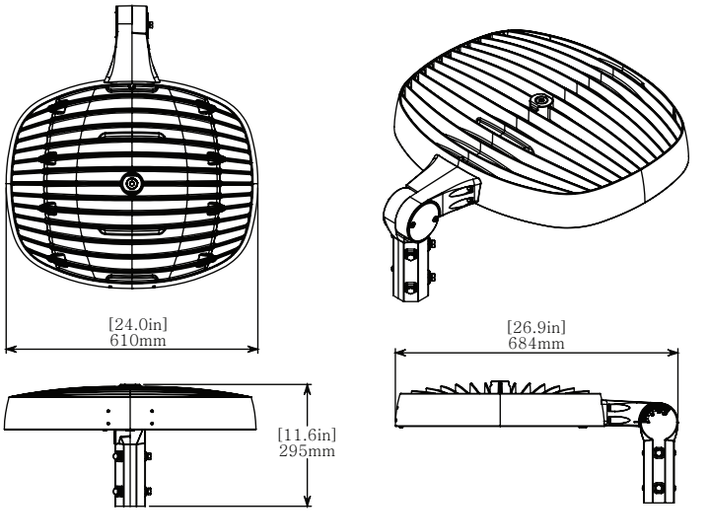

Stepped to accept either 1.5" Trade size (1-13/16" [46mm] to 2" [50mm] OD) & 2" Trade size (2-1/8" [53mm] to 2-7/16" [63mm])

THREADED ADJUSTABLE POLE MOUNT (AR-SFY-1.5): 17.4 kg | 39.5 lbs
EPA: 0.3 m^2 / 3.24 ft^2

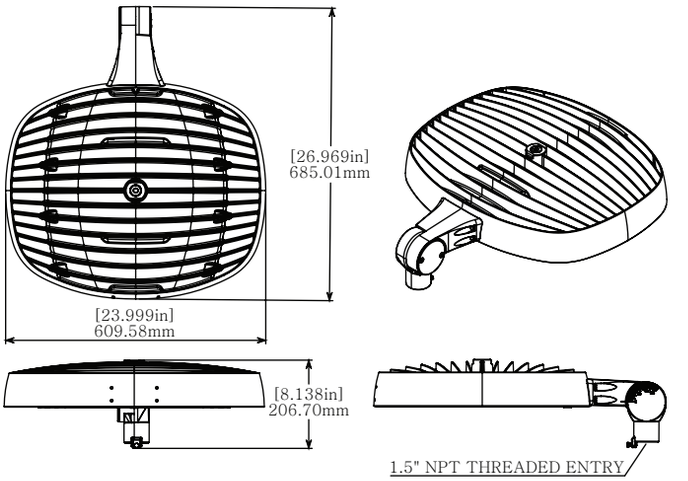

SECONDARY SAFETY KIT (AR-SK-##)

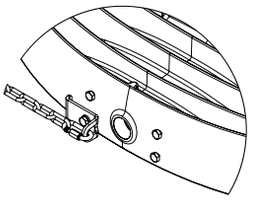

##represents the safety chain length in feet (i.e. 05=5', 10=10'). Secondary Safety Kit contains bracket, stainless steel chain (1/8 trade size), and two stainless steel oval threaded connecting links.

ORDERING INFORMATION

PROJECT NAME		TYPE
PROJECT LOCATION		
COMMENT		DATE
PREPARED BY		

MODEL SELECTOR

Sample Number: AR30-50-WC-GY-GN-AC

MODEL	COLOUR	OPTIC	FINISH	LOCATION	POWER
-		- -	-	GN -	
AR10[5] **AR15**[5] **AR20**[5] **AR25**[5] **AR30**[5]	**50** - 5000K Special Order: **27** - 2700K[1,3] **27H** - 2700K High CRI[1,3] **30** - 3000K[1,3] **30H** - 3000K High CRI[1,3] **35** - 3500K[1] **35H** - 3500K High CRI[1] **40** - 4000K[1] **40H** - 4000K High CRI[1] **50H** - 5000K High CRI[1] **57** - 5700K[1] **57H** - 5700K High CRI[1] **65** - 6500K[1] **65H** - 6500K High CRI[1]	**WC** - Wide Beam (No optics) Special Order: **T1** - IESNA Type 1[1] **T2** - IESNA Type 2[1] **T3** - IESNA Type 3[1] **T4** - IESNA Type 4[1] **T5** - IESNA Type 5[1] **SC** - Spot 18° [1] **TC** - Tight 32° [1] **MC** - Medium 50° [1] **OC** - Oval 26° x 108° [1] **PX** - Asymmetric 20° x 80° w/ 45° forward kick[1] **FN** - Asymmetric 90° x 22° w/ 45° forward kick[1] **2W** - Asymmetric 135° x 55° w/ 25° forward kick[1] **3W** - Asymmetric 155° x 55° w/ 30° forward kick[1] **W1** - Asymmetric 150° x 52° w/ 30° forward kick[1] **DN** - Asymmetric 105° x 55° w/ 25° forward kick[1] **XW** - Asymmetric 135° x 170° w/ 75° forward kick[1] **VSM** - IESNA Type 5 (Square beam for wide area lighting)[1]	**GY** - Grey Custom finishes are available. Please contact for details.[1]	**GN** - General Location	**AC** - 120-277VAC **HV** - 347-480VAC

ACCESSORIES (Order Separately)

Sample Number: AR-WM2-GY

ACCESSORY	FINISH
-	GY
AR-SM - Surface Mount **AR-WM2** - Wall Mount 2[3] **AR-HK** - Hook Pendant Mount **AR-PM** - Pole Mount[3] **AR-YM** - Yoke Mount[2] **AR-YK** - High Vibration Yoke Mount[3] **AR-CM** - Conduit Mount[3] **AR-SFY** - Slip Fitter Yoke Mount **AR-SFY-1.5** - Threaded Adjustable Pole Mount **AR-SK-##** - Secondary Safety Kit[4] **AR-SP-AC** - Surge Suppressor[6] **AR-SP-HV** - Surge Suppressor[6]	**GY** - Grey Custom finishes are available. Please contact for details.[1,2]

NOTES:

1. *Minimum order quantities, additional costs and lead times may apply.*
2. *Only available in stainless steel finish.*
3. *IDA Fixture Seal of Approval only applies to fixtures with a CCT of 3000K or less, and have fixed mounts aiming the fixture perpendicular to the ground.*
4. *## represents the safety chain length in feet (i.e. 05=5', 10=10'). Secondary safety kit contains bracket, stainless steel chain (1/8 trade size), and two stainless steel oval threaded connecting links.*
5. *See DLC listed models chart.*
6. *See surge suppressor options.*

DLC listed models chart:

DesignLights Consortium (DLC) v5.1 Qualified LED Luminaire Listings			
Model No.	*Category*	*General Application*	*Classification*
AR10-50-WC-xx-xx-AC	*Outdoor Luminaires*	*High Output*	*DLC Premium*
	Indoor Luminaires	*High-Bay*	*DLC Standard*
AR15-50-WC-xx-xx-[AC,HV]	*Outdoor Luminaires*	*High Output*	*DLC Premium*
	Indoor Luminaires	*High-Bay*	*DLC Standard*
AR20-50-WC-xx-xx-[AC,HV]	*Outdoor Luminaires*	*High Output*	*DLC Premium*
	Indoor Luminaires	*High-Bay*	*DLC Standard*
AR25-50-WC-xx-xx-[AC,HV]	*Outdoor Luminaires*	*High Output*	*DLC Premium*
	Indoor Luminaires	*High-Bay*	*DLC Standard*
AR30-50-WC-xx-xx-[AC,HV]	*Outdoor Luminaires*	*Very High Output*	*DLC Premium*
	Indoor Luminaires	*High-Bay*	*DLC Standard*

Surge suppressor options:

AR-SP-AC – 277V FOR USE WITH -AC AR MODELS

-Protects against surges and transients per ANSI C62.41-2002 category C high (10KV, 1.2/50µS & 10KA, 8/20µS) standard Combo waves and (6KV, 100KHz) Ring wave

-Protects against surges and transients per new ANSI C82.77-5 2015 category C high (20KV, 1.2/50µS & 10KA, 8/20µS) standard Combo waves and (6KV, 100KHz) Ring wave

AR-SP-HV – 480V FOR USE WITH -HV AR MODELS

-Protects against surges and transients per ANSI C62.41-2002 category C high (10KV, 1.2/50µS & 10KA, 8/20µS) standard Combo waves and (6KV, 100KHz) Ring wave

-Protects against surges and transients per new ANSI C82.77-5 2015 category C high (20KV, 1.2/50µS & 10KA, 8/20µS) standard Combo waves and (6KV, 100KHz) Ring wave