Nemalux™

JR-GN
rev. A1

KEY FEATURES

- Compact and multi-functional luminaire for challenging applications
- Thermal separation of LED and power supply allows max ambient temperatures of up to +60°C
- Marine grade copper-free aluminum housing with multi-layer powder coated finish
- Approved for through-wiring of multiple luminaires on a single circuit
- Available in two lumen output models with several beam profiles
- Polycarbonate* or glass lens with a clear or frosted finish
- 3x 3/4" NPT entries
- 0-10V dimmable

TECHNICAL SPECIFICATIONS / MAXIMUM RATINGS

HOUSING	Copper-free high pressure die-cast aluminum housing, glass or polycarbonate* protective lens, stainless steel fasteners
MOUNTING	SEE PAGE 3 & 4 FOR MOUNTING OPTIONS
INPUT VOLTAGE	**AC:** 120-277 VAC | **HV:** 347 VAC (50/60Hz)
POWER (TYP)	**JR2:** 18 W | **JR4:** 37 W
CURRENT (TYP)	**JR2:** AC 0.15A @ 120VAC | HV 0.07A @ 347VAC **JR4:** AC 0.32A @ 120VAC | HV 0.11A @ 347VAC
CONNECTIONS	3 x 3/4" NPT Entries
DIMMING	0-10V Dimmable, Class 1 wiring | See CHART on Page 2
TEMPERATURE RANGE	-40°C to +60°C
CERTIFICATIONS	Conforms to: CSA C22.2 No. 250.0:21; CSA C22.2 No. 250.12:20; IEC 60529; UL 1598; UL 1598A; UL 8750
INGRESS PROTECTION	IP66/67 Suitable for wet locations Marine Outside type (Salt Water)
COLOUR TEMP RANGE	**50**: 5,000K | **Special Order**: 2,700-6,500K
CRI VALUE (MIN)	**50**: 70 | Higher CRI options available for special order
TOTAL LUMENS	**JR2:** GWC - 2,874 | **JR4:** GWC - 5,227
LUMEN MAINTENANCE	LM-80 > 100,000 hrs*
WEIGHT	2.58 kg | 5.68 lbs

**Models with a polycarbonate lens are not approved for Class II Division 1 use*
***The ambient temperature during lifetime, lumen and chromaticity determination is 25°C ± 1°C*

DIMENSIONS

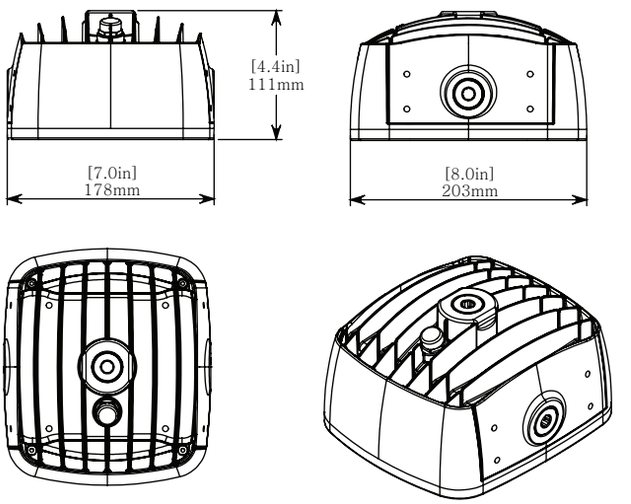

WARRANTY

Five (5) year limited warranty to the original purchaser. The warranty covers defects in materials and workmanship under normal use and service.

For additional information see: https://www.nemalux.com/legal

OPTIC OPTIONS

Vertical Plane 0-180°
Vertical Plane 90-270°
Max Horizontal Plane

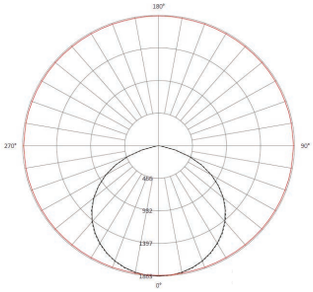

GWC - Wide Beam (No Optics)

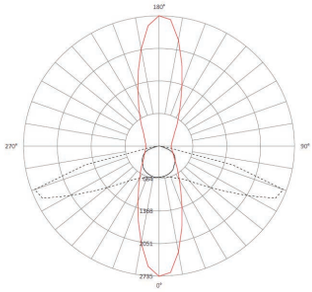

GT1 - IESNA Type 1

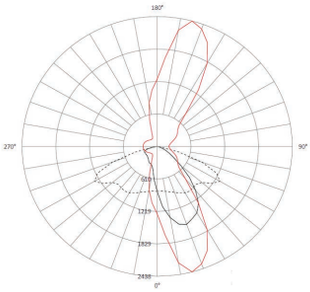

GT2 - IESNA Type 2

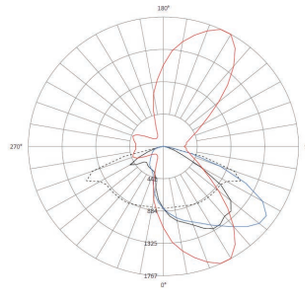

GT3 - IESNA Type 3

AC MODELS (5000K CCT, minimum 70CRI)

MODEL	LUMENS	WATTS	LUMENS/WATT
JR2	2,874	18	162
JR4	5,227	36	144

MODEL	LUMENS	WATTS	LUMENS/WATT
JR2	2,033	19	107
JR4	3,609	38	95

MODEL	LUMENS	WATTS	LUMENS/WATT
JR2	2,084	19	110
JR4	3,700	38	97

MODEL	LUMENS	WATTS	LUMENS/WATT
JR2	2,091	19	110
JR4	3,613	37	95

HV MODELS (5000K CCT, minimum 70CRI)

MODEL	LUMENS	WATTS	LUMENS/WATT
JR2	3,218	23	139
JR4	5,227	38	136

MODEL	LUMENS	WATTS	LUMENS/WATT
JR2	2,033	23	99
JR4	3,609	38	95

MODEL	LUMENS	WATTS	LUMENS/WATT
JR2	2,334	23	101
JR4	3,700	38	97

MODEL	LUMENS	WATTS	LUMENS/WATT
JR2	2,341	23	101
JR4	3,613	38	95

Note: Standard offering above, alternate optical profiles available upon request.
Contact Nemalux Sales representative for further details. Minimum order quantities, additional costs and lead times may be applicable.

PHOTOMETRICS

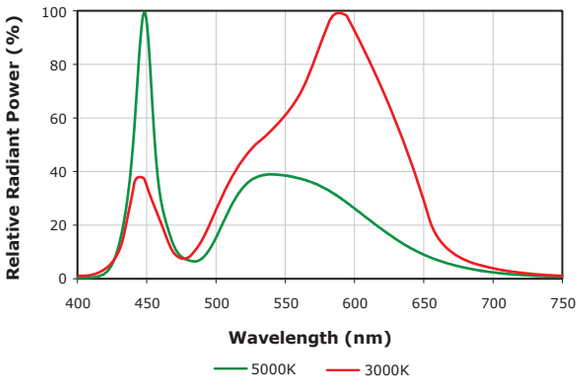

DIMMING

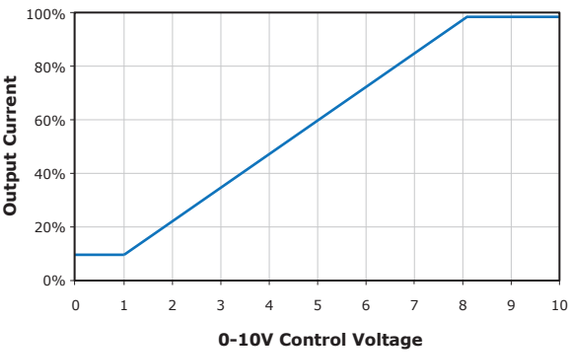

- Driver will source a maximum of 200uA for control needs
- Controller must sink current from the 0-10V control leads

MOUNTING OPTIONS (Order Separately)

SURFACE MOUNT (JR-SM) : 2.72 kg | 5.98 lbs | EPA: 0.03m^2 / 0.34ft^2

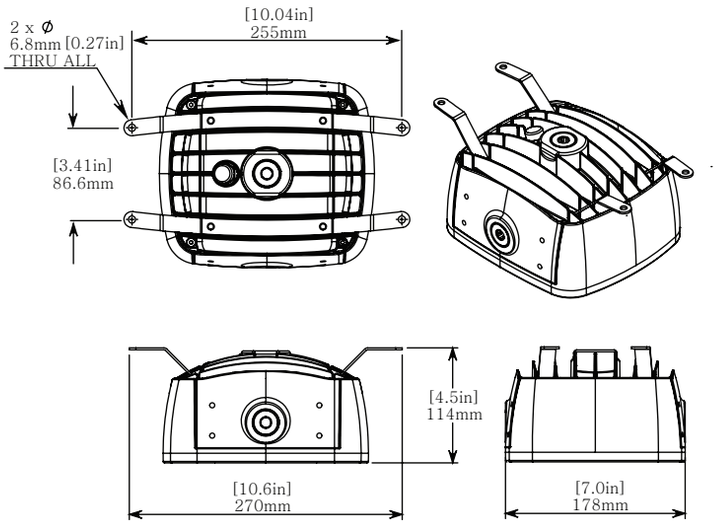

POLE MOUNT (JR-PM) : 3.51 kg | 7.72 lbs | EPA: 0.04 m^2 / 0.44ft^2

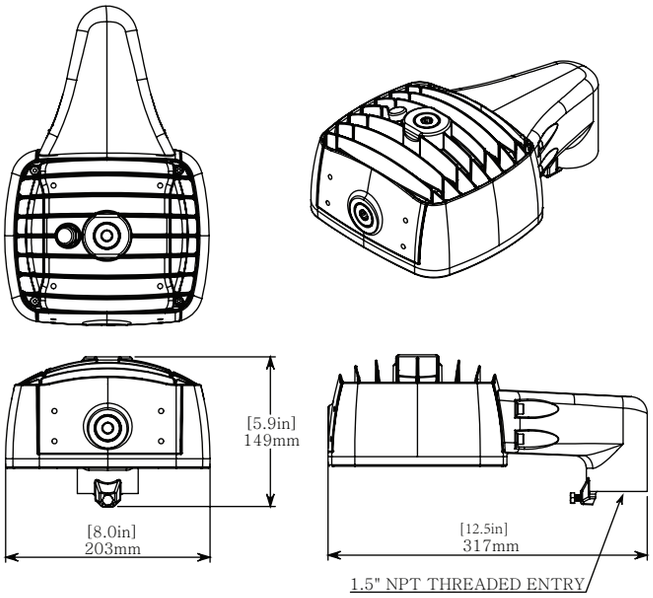

WALL MOUNT 2 (JR-WM2) : 3.78 kg | 8.18 lbs | EPA: 0.04 m^2 / 0.39ft^2

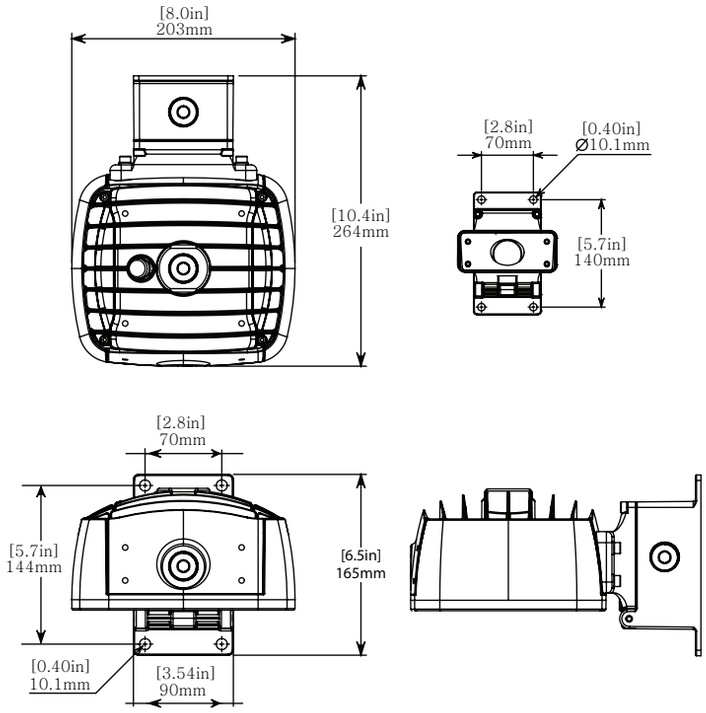

WM2 internal volume - 18.6 cubic inches | 305 cubic centimeters

YOKE MOUNT (JR-YM) : 4.38 kg | 9.64lbs | EPA: 0.04 m^2 / 0.4ft^2

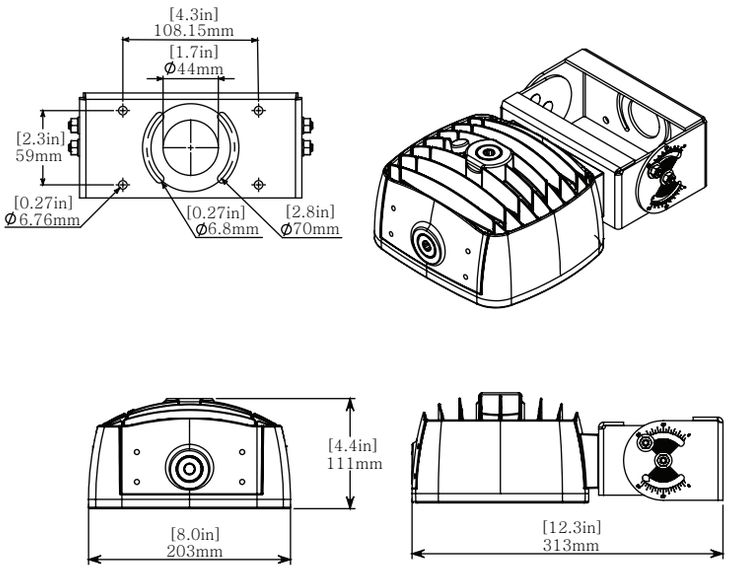

MOUNTING OPTIONS (Order Separately)

PENDANT HOOK MOUNT (JR-HK) : 3.51 kg | 7.72 lbs

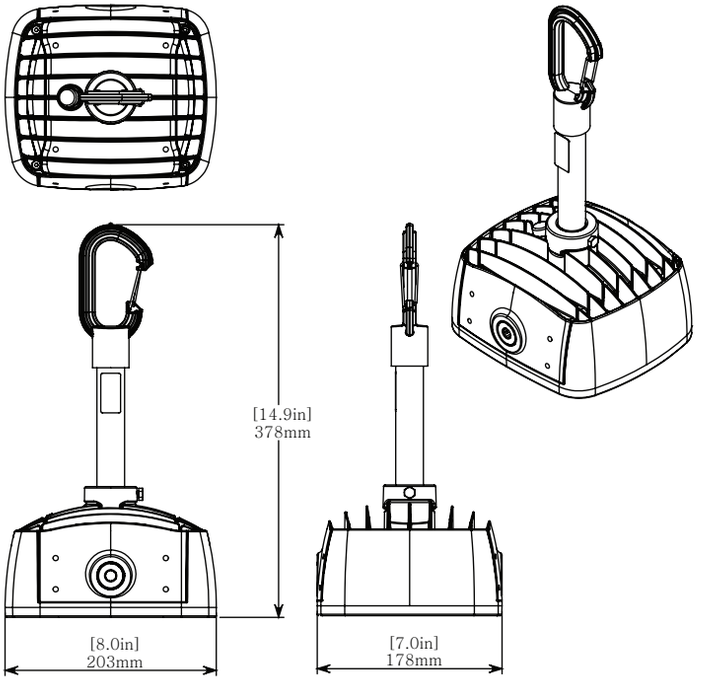

CONDUIT ROTATION LOCK MOUNT (JR-CC) : 2.61 kg | 5.74 lbs

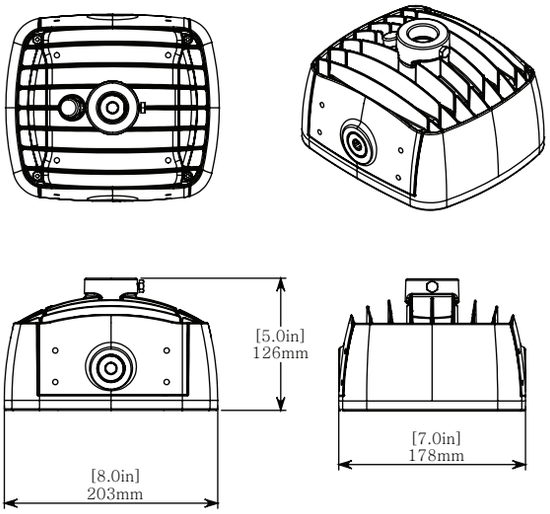

HIGH VIBRATION YOKE MOUNT (JR-YK) : 3.6 kg | 7.92 lbs
EPA: 0.03 m^2 / 0.36ft^2

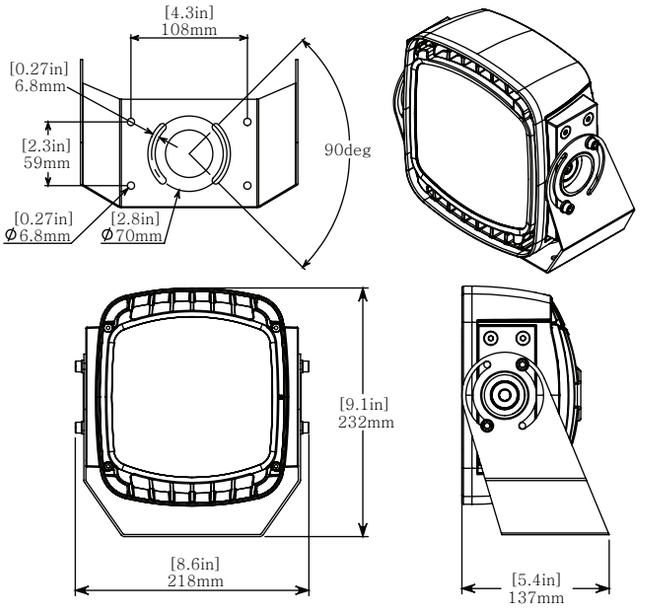

SLIP FITTER YOKE MOUNT (JR-SFY) : 4.43 kg | 9.75 lbs | EPA: 0.06 m^2 / 0.6ft^2

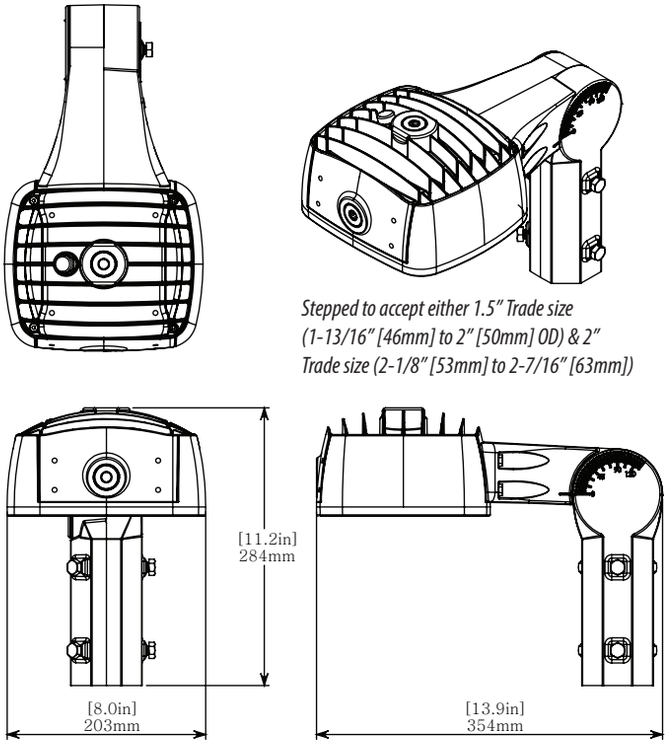

Stepped to accept either 1.5" Trade size (1-13/16" [46mm] to 2" [50mm] OD) & 2" Trade size (2-1/8" [53mm] to 2-7/16" [63mm])

ORDERING INFORMATION

PROJECT NAME		TYPE
PROJECT LOCATION		
COMMENT		DATE
PREPARED BY		

MODEL SELECTOR

Sample Number: JR4-50-GWC-GY-GN-AC

MODEL	COLOUR	LENS | OPTIC	FINISH	LOCATION	POWER
-	-	-	GY -	GN -	AC
JR2 **JR4**	**50** - 5,000K, 70CRI Special Order: **27** - 2,700K, 70CRI[1] **27H** - 2,700K, 90CRI[1] **30** - 3,000K, 70CRI[1] **30H** - 3,000K, 90CRI[1] **35** - 3,500K, 80CRI[1] **35H** - 3,500K, 90CRI[1] **40** - 4,000K, 70CRI[1] **40H** - 4,000K, 90CRI[1] **50H** - 5,000K, 90CRI[1] **57** - 5,700K, 70CRI[1] **57H** - 5,700K, 90CRI[1] **65** - 6,500K, 70CRI[1] **65H** - 6,500K, 90CRI[1]	**GWC** - Wide Beam with Clear Glass Lens Special Order: **GT1** - Type 1 Beam Profile with Clear Glass Lens **GT2** - Type 2 Beam Profile with Clear Glass Lens **GT3** - Type 3 Beam Profile with Clear Glass Lens **GT4** - Type 4 Beam Profile with Clear Glass Lens[1] **GVSM** - Type 5 Square Beam Profile with Clear Glass Lens[1] **GS** - Spot 18° Beam Profile with Clear Glass Lens[1] **GT** - Tight 32° Beam Profile with Clear Glass Lens[1] **GM** - Medium 50° Beam Profile with Clear Glass Lens[1] **WC** - Wide Beam with Clear Polycarbonate Lens[1] **T1** - Type 1 Beam Profile with Clear Polycarbonate Lens[1] **T2** - Type 2 Beam Profile with Clear Polycarbonate Lens[1] **T3** - Type 3 Beam Profile with Clear Polycarbonate Lens[1] **T4** - Type 4 Beam Profile with Clear Polycarbonate Lens[1] **VSM** - Type 5 Square Beam Profile with Clear Polycarbonate Lens[1] **M** - Medium 50° Beam Profile with Clear Polycarbonate Lens[1] **S** - Spot 18° Beam Profile with Clear Polycarbonate Lens[1] **T** - Tight 32° Beam Profile with Clear Polycarbonate Lens[1] **M** - Medium 50° Beam Profile with Clear Polycarbonate Lens **FXXX** - F in first position denotes a Frosted Polycarbonate Lens **GFXXX** - The G may be followed by an F, denoting a Frosted Glass Lens	**GY** - Grey Custom finishes are available. Please contact for details.[1]	**GN** - General Location	**AC** - 120-277VAC (50/60Hz) **HV** - 347VAC (50/60Hz)

ACCESSORIES (Order Separately)

Sample Number: JR-SM

ACCESSORY	FINISH
-	
JR-SM - Surface/Suspended Mount[2] **JR-PM** - Pole Mount **JR-WM2** - Wall Mount 2 **JR-HK** - Pendant Hook Mount **JR-YM** - Yoke Mount[2] **JR-YK** - High Vibration Yoke Mount[2] **JR-CC** - Conduit Rotation Lock Mount **JR-SFY** - Slip Fitter Yoke Mount	**GY** - Grey Custom finishes are available. Please contact for details.[1]

NOTES:

1. Minimum order quantities, additional costs and lead times may apply.
2. Only available in stainless steel finish.