Nemalux™

BL-Z21
rev. A1

KEY FEATURES

- Designed for harsh and hazardous location use
- Field serviceable light engines, power supply, and housing elements
- Copper-free aluminum housing with polycarbonate or glass lens
- Approved for through-wiring of multiple units on a single circuit
- Lightweight replacement for conventional vapor-tight lights
- Built-in junction area for simplified termination
- 7 mounting options for deployment flexibility

LC21CA19098-1X

TECHNICAL SPECIFICATIONS / MAXIMUM RATINGS

HOUSING	Copper Free Aluminum and Glass Lens
MOUNTING	See Pages 3 - 5 for MOUNTING OPTIONS
INPUT VOLTAGE	**AC**: 120-277VAC (50/60 Hz)
RATED POWER	**BL20**: 17W | **BL40**: 34W
TYPICAL CURRENT	**BL20**: 120VAC, 0.14A | 277VAC, 0.06A **BL40**: 120VAC, 0.28A | 277VAC, 0.12A
CONNECTIONS	3 x 3/4" NPT Entries
DIMMING	0-10V Dimmable, Class 1 wiring | See CHART on Page 2
TEMPERATURE RANGE	-50°C to +65°C (Case ~30°C above ambient)
CERTIFICATIONS	*Conforms to:* CSA C22.2 NO. 60079-0, CSA-C22.2 NO. 60079-31, CSA-C22.2 No. 250.0, and CSA 22.2 No. 250.13 Ex tb IIIC Db T94°C -50°C <Ta< +65°C Zone 21
INGRESS PROTECTION	IP66 Suitable for wet locations.
COLOUR TEMP RANGE	**50**: 5000K | **Special Order**: 2700-6500K (CCT)
CRI VALUE (MIN)	**50**: 70
EFFICACY (5000K)	**BL20**: 145 lm/w | **BL40**: 131 lm/w (5000K CCT, 120VAC typical power)
TOTAL LUMENS (5000K)	**BL20**: 2540 | **BL40**: 4475
PROJECTED SYSTEM LIFE	>100,000 hrs
WEIGHT	3.8 kg (8.4 lbs)

** The ambient temperature during lifetime, lumen and chromaticity determination is 25°C ± 1°C.*

DIMENSIONS

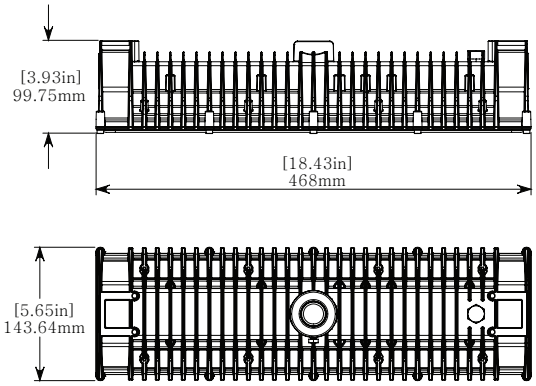

WARRANTY

Five (5) year limited warranty to the original purchaser. The warranty covers defects in materials and workmanship under normal use and service.

For additional information see:
https://nemalux.com/legal

DISTRIBUTION

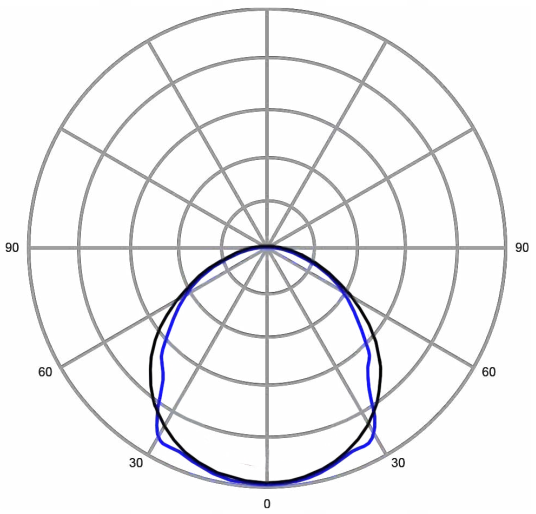

WF - Wide Beam (No Optic)

LUMEN OUTPUT (50)	
BL20	2540
BL40	4475

PHOTOMETRICS

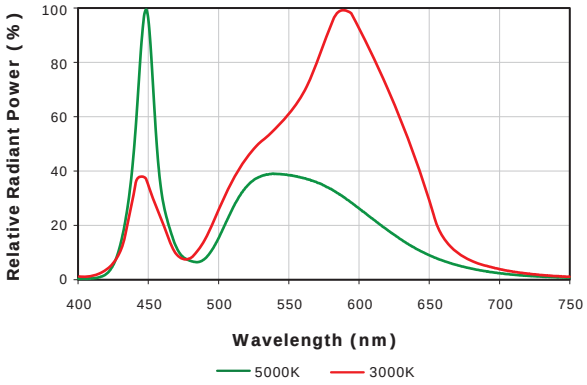

DIMMING

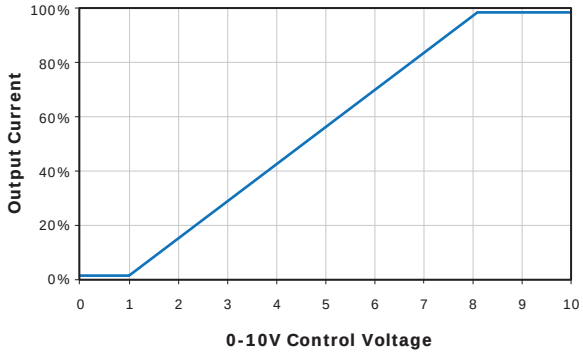

- *Driver will source a maximum of 200uA for control needs*
- *Controller must sink current from the 0-10V control leads*

MOUNTING OPTIONS (Ordered Separately)

PENDANT/CONDUIT MOUNT (R-CC) : 3.0 kg | 6.6 lbs *Not including conduit*
(Direct connection of BL luminaire to hanging conduit)

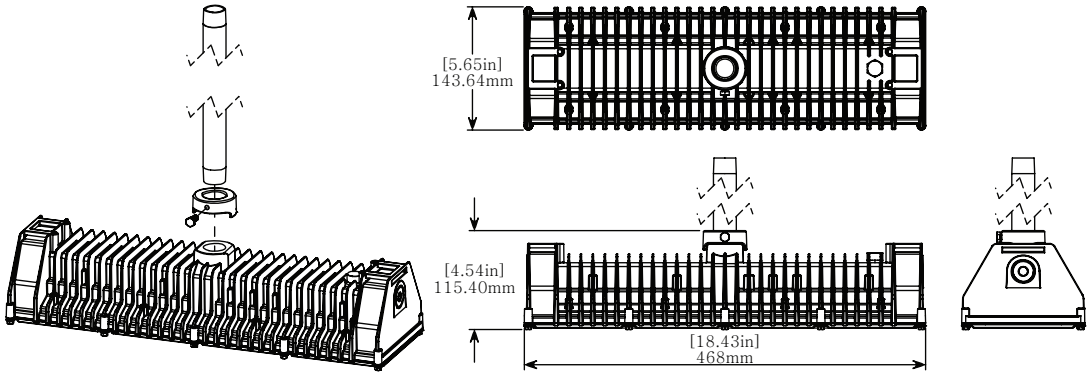

SURFACE MOUNT (BL-SM) : 3.2 kg | 7.0 lbs

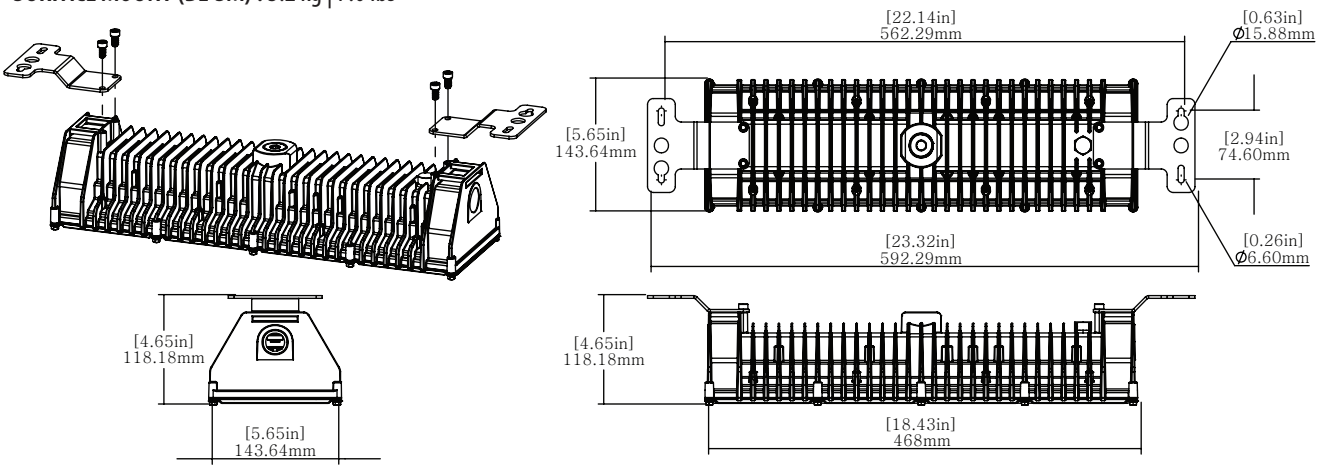

WALL MOUNT (BL-WM) : 3.1 kg | 6.8 lbs

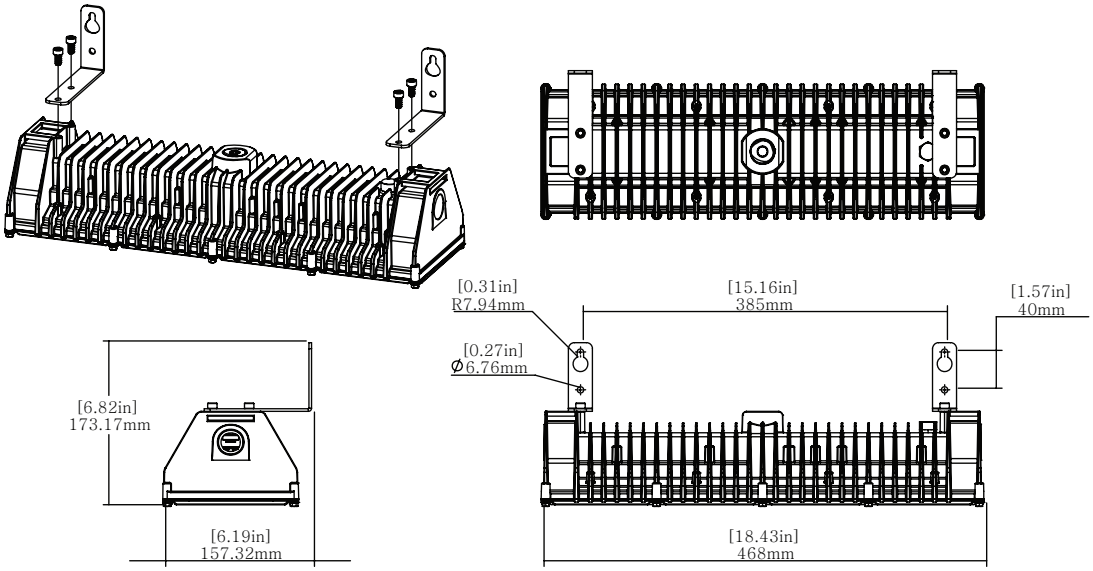

MOUNTING OPTIONS (Ordered Separately)

ADJUSTABLE YOKE MOUNT (BL-YM) : 3.3 kg | 7.2 lbs

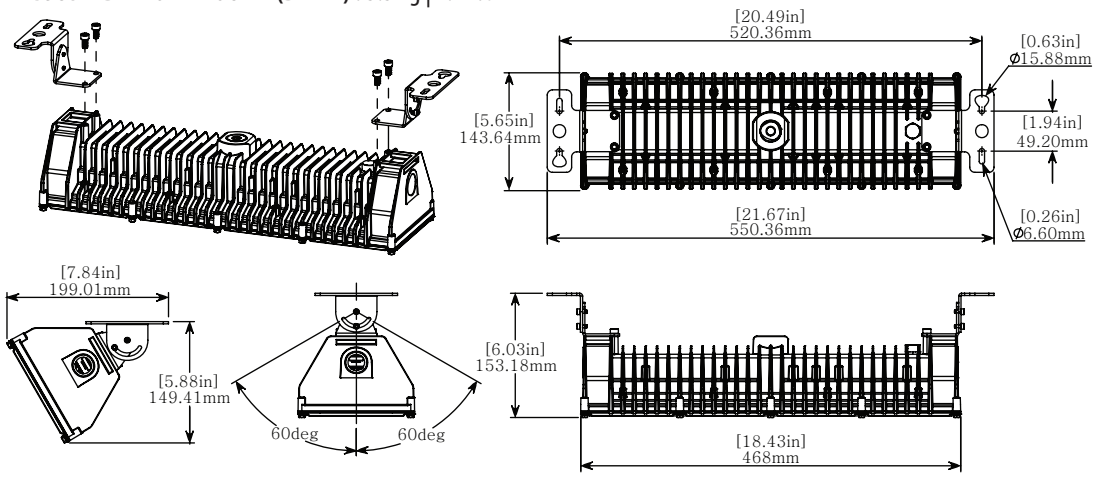

HOOK MOUNT (BL-HK) : 3.2 kg | 7.0 lbs

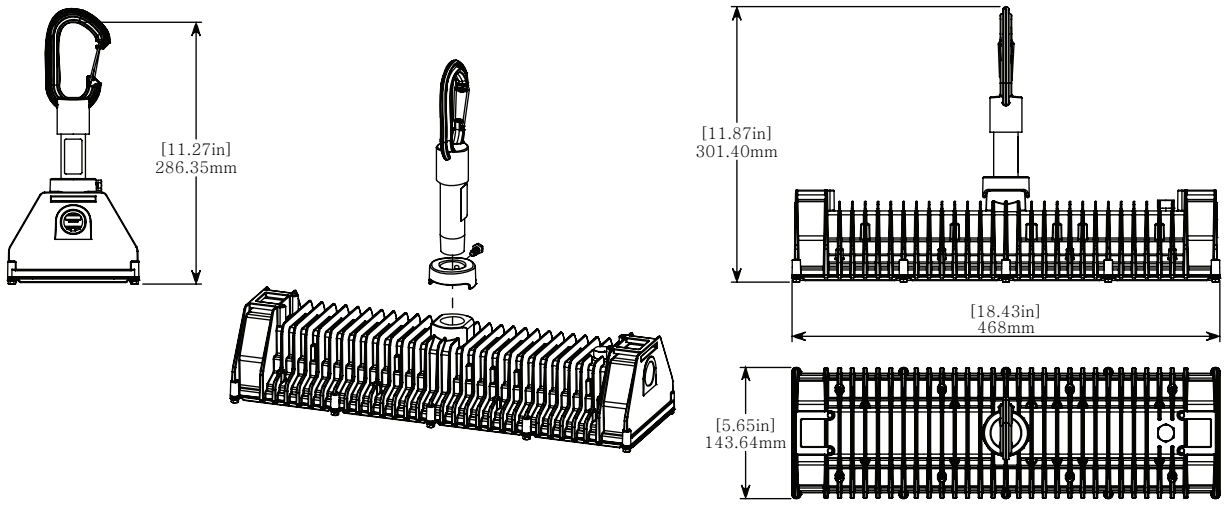

MOUNTING OPTIONS (Ordered Separately)

TUBE CLAMP MOUNT (BL-TC) : 3.2 kg | 7.0 lbs

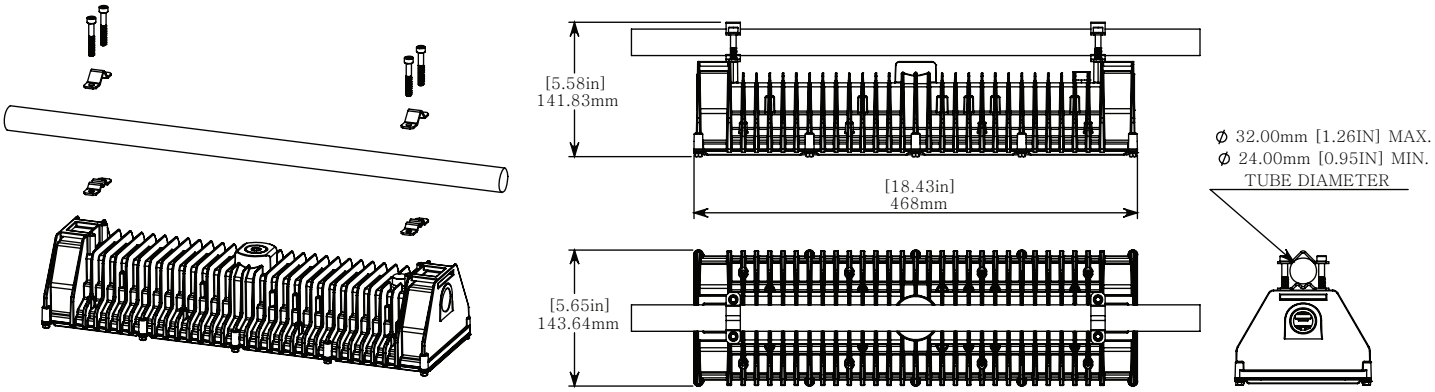

STRAP MOUNTING : 3.1 kg | 6.8 lbs

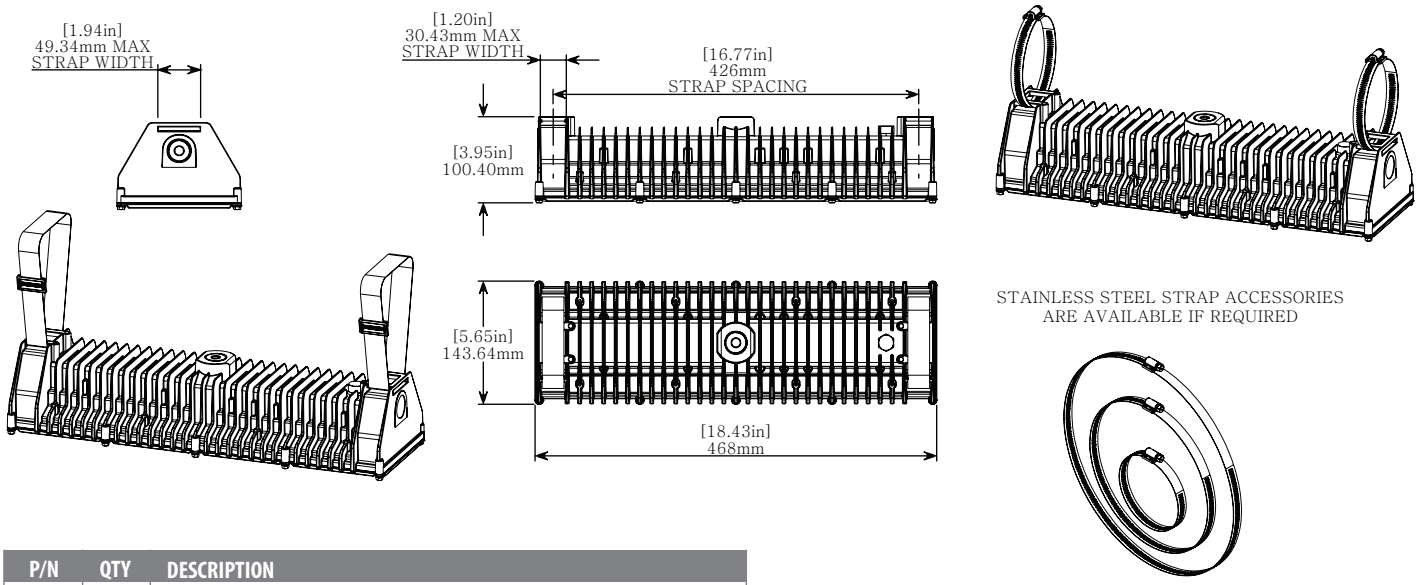

P/N	QTY	DESCRIPTION
STS12	2	Stainless steel tube clamp, fits 9 3/8" to 12" tubing diameter
STS9	2	Stainless steel tube clamp, fits 7 1/8" to 9 3/4" tubing diameter
STS8	2	Stainless steel tube clamp, fits 5 5/8" to 8 1/4" tubing diameter
STS6	2	Stainless steel tube clamp, fits 4 1/8" to 6 3/4" tubing diameter
STS5	2	Stainless steel tube clamp, fits 3 5/8" to 6 1/4" tubing diameter
STS4	2	Stainless steel tube clamp, fits 3 5/16" to 4 1/4" tubing diameter
STS3	2	Stainless steel tube clamp, fits 2 9/16" to 3 1/4" tubing diameter

ORDERING INFORMATION

PROJECT NAME		TYPE
PROJECT LOCATION		
COMMENT		DATE
PREPARED BY		

MODEL SELECTOR

Sample Number: BL40-50-GY-Z21-AC-GW

MODEL	COLOUR	FINISH	LOCATION	VOLTAGE	WINDOW
-	-	GY -	Z21 -	AC -	GW
BL20 **BL40**	**50** - 5000K(70CRI) Special Order: **27** - 2700K, 70CRI[2] **27H** - 2700K, 90CRI[2] **30** - 3000K, 70CRI[2] **30H** - 3000K, 90CRI[2] **40** - 4000K, 70CRI[2] **40H** - 4000K, 90CRI[2] **50H** - 5000K 90CRI[2] **57** - 5700K, 70CRI[2] **57H** - 5700K, 90CRI[2] **65** - 6500K, 70CRI[2] **65H** - 6500K, 90CRI[2]	**GY** - Grey Custom finishes are available. Please contact for details.[2]	**Z21** - Zone Approval	**AC** - 120-277VAC	**GW** - Glass window in stainless frame

ACCESSORIES (Ordered Separately)[3]

Sample Number: BL-SM

ACCESSORY	COLOR
-	
R-CC - Pendant/Conduit Mount **SM** - Surface Mount[1] **WM** - Wall Mount[1,2] **YM** - Adjustable Yoke Mount[1,2] **HK** - Hook Mount **TC** - Tube Clamp Mount[1,2] **STS##** - Stainless Steel Straps (See pg. 4)[1]	**GY** - Grey

NOTES:

1. Stainless steel mounting accessories have no colour code - i.e. BL-SM.
2. Minimum order quantities, additional costs and lead times may apply.
3. Mounting hardware may be ordered with luminaire or as stand-alone hardware kits.