# Nemalux™

# JR-EN
rev. A1

## KEY FEATURES

- IP68 - Fully encapsulated and suitable for permanent submersion (up to 25ft depth)
- Marine grade aluminum alloy housing with a triple layer powdercoated finish for optimized corrosion resistance
- Provided with standard glass or special order polycarbonate lens
- Approved for marine use, outside type (saltwater)
- 0-10v dimmable power supply (class 1 wiring)
- Thermally managed for maximum longevity
- -40°C to +60°C operating range
- Designed for harsh locations

## TECHNICAL SPECIFICATIONS / MAXIMUM RATINGS

| | |
|---|---|
| **HOUSING** | Copper-free high pressure die-cast aluminum housing, glass or polycarbonate protective lens, stainless steel fasteners |
| **MOUNTING** | SEE PAGE 3 FOR MOUNTING OPTIONS |
| **INPUT VOLTAGE** | **AC:** 120-277 VAC \| **HV:** 347 VAC |
| **POWER (TYP)** | **JR2:** 18 W \| **JR4:** 37 W |
| **CURRENT (TYP)** | **JR2:** AC 0.15A @ 120VAC \| HV 0.07A @ 347VAC<br>**JR4:** AC 0.32A @ 120VAC \| HV 0.11A @ 347VAC |
| **CONNECTIONS** | Unless otherwise specified, luminaire supplied with 3.3 meter (10ft) 18/3 SOOW 9.3mm (0.365") diameter cord wired from side entry. 0-10V dimming is only possible if 18/5 SOOW 11.9mm (0.47") diameter cord is specified.* |
| **DIMMING** | 0-10V Dimmable, Class 1 wiring \| See CHART on Page 2 |
| **TEMPERATURE RANGE** | -40°C to +60°C |
| **CERTIFICATIONS** | Conforms to:<br>CSA C22.2 No. 250.0:21;<br>CSA C22.2 No. 250.12:20;<br>IEC 60529;<br>UL 1598, UL1598A, UL 8750; |
| **INGRESS PROTECTION** | IP68 Fully encapsulated and suitable for permanent submersion (up to 25ft depth) |
| **COLOUR TEMP RANGE** | **50**: 5,000K \| **Special Order**: 2,700-6,500K |
| **CRI VALUE (MIN)** | **50**: 70 \| Higher CRI options available for special order |
| **TOTAL LUMENS** | **JR2:** GWC - 2,299 \| **JR4:** GWC - 4,181 |
| **LUMEN MAINTENANCE** | LM-80 > 100,000 hrs** |
| **WEIGHT** | 3.28 kg \| 7.22 lbs |

**Contact us for alternative cord length, cord type, cord entry and cable gland selection.*
***The ambient temperature during lifetime, lumen and chromaticity determination is 25°C ± 1°C.*

## DIMENSIONS

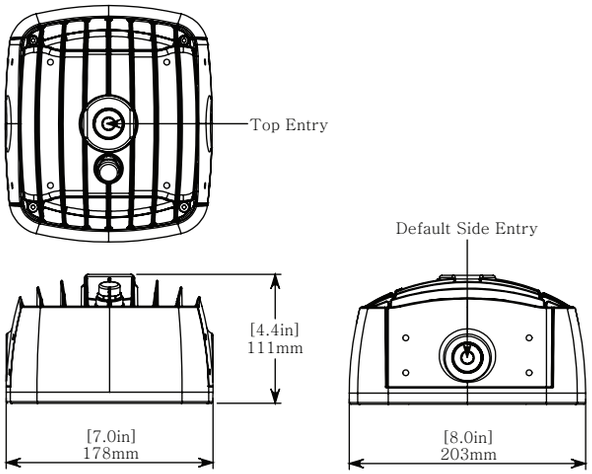


## WARRANTY

Five (5) year limited warranty to the original purchaser. The warranty covers defects in materials and workmanship under normal use and service.

For additional information see: https://www.nemalux.com/legal

## OPTIC OPTIONS

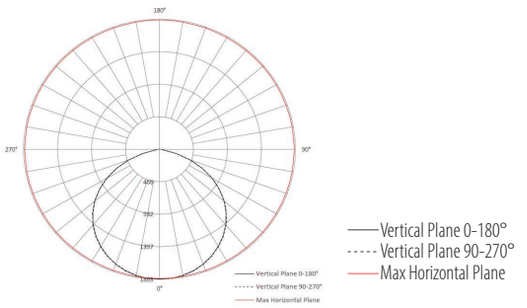


GWC - Wide Beam (No Optics)

### AC MODELS (5000K CCT, minimum 70CRI)

| MODEL | LUMENS | WATTS | LUMENS/WATT |
|---|---|---|---|
| JR2 | 2,299 | 18 | 127 |
| JR4 | 4,181 | 36 | 116 |

## PHOTOMETRICS

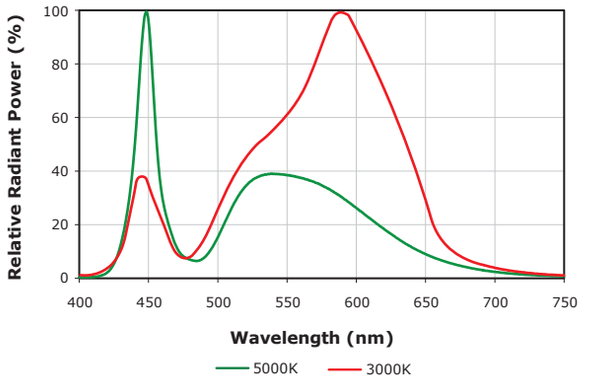


## OPTIONAL 0-10V DIMMING*

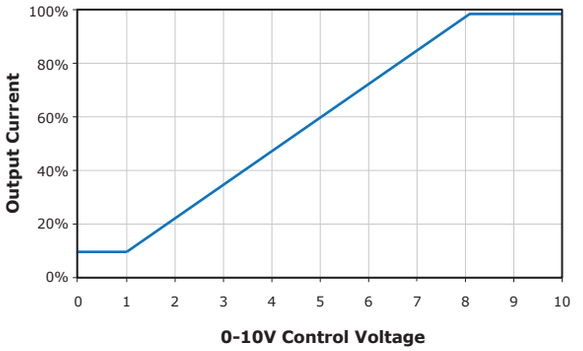


- Driver will source a maximum of 200uA for control needs
- Controller must sink current from the 0-10V control leads

**Contact us to specify dimming models and cord requirements*

## MOUNTING OPTIONS (Order Separately)

**SURFACE MOUNT (JR-SM) :** 3.42 kg | 7.52 lbs | EPA: 0.03 $m^2$ / 0.34 $ft^2$

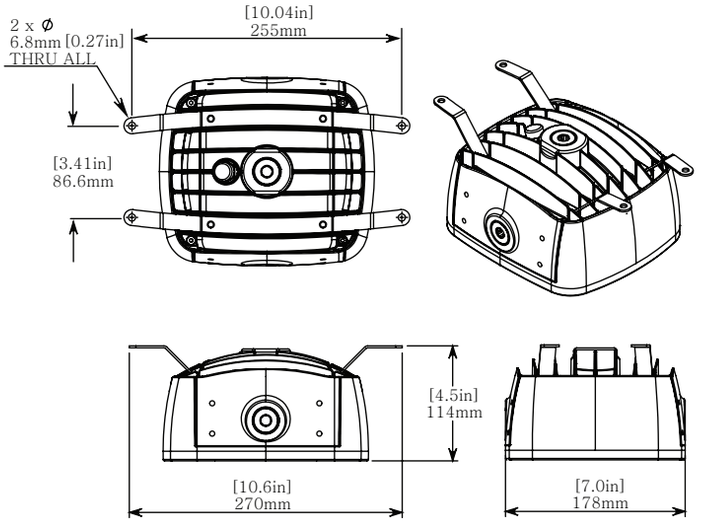


**YOKE MOUNT (JR-YM) :** 5.08 kg | 11.18 lbs | EPA: 0.04 $m^2$ / 0.4 $ft^2$

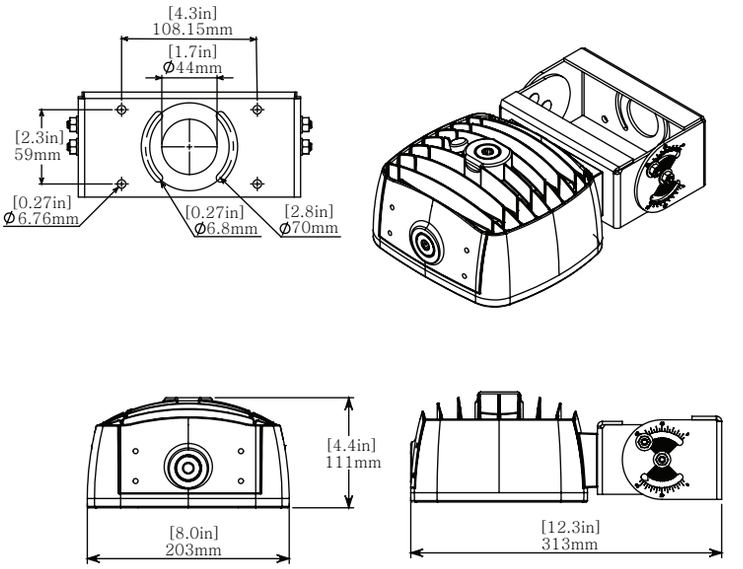


**PENDANT HOOK MOUNT (JR-HK) :** 4.21 kg | 9.26 lbs

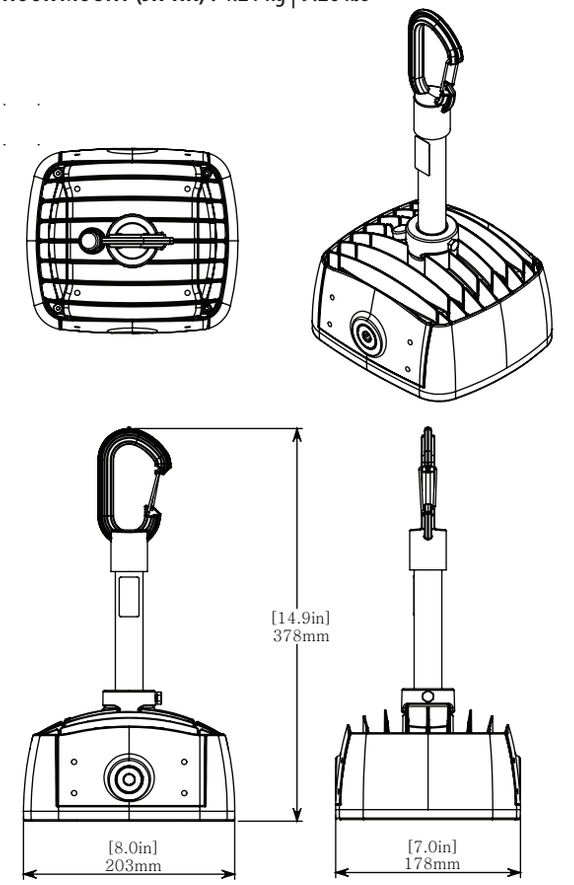


**HIGH VIBRATION YOKE MOUNT (JR-YK) :** 4.30 kg | 9.46 lbs
EPA: 0.03 $m^2$ / 0.36 $ft^2$

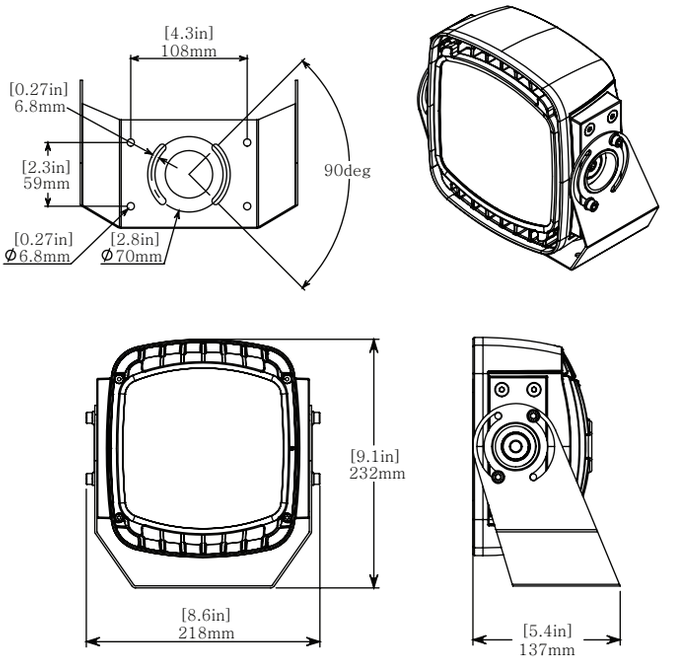

## ORDERING INFORMATION

| | | |
|---|---|---|
| PROJECT NAME | | TYPE |
| PROJECT LOCATION | | |
| COMMENT | | DATE |
| PREPARED BY | | |

## MODEL SELECTOR

**Sample Number: JR4-50-GWC-GY-EN-AC**

| MODEL | COLOUR | LENS \| OPTIC | FINISH | LOCATION | POWER |
|---|---|---|---|---|---|
| - | - | - | GY - | EN - | |
| **JR2**<br>**JR4** | **50** - 5,000K, 70CRI<br><br>Special Order:<br>**27** - 2,700K, 70CRI[1]<br>**27H** - 2,700K, 90CRI[1]<br>**30** - 3,000K, 70CRI[1]<br>**30H** - 3,000K, 90CRI[1]<br>**35** - 3,500K, 80CRI[1]<br>**35H** - 3,500K, 90CRI[1]<br>**40** - 4,000K, 70CRI[1]<br>**40H** - 4,000K, 90CRI[1]<br>**50H** - 5,000K, 90CRI[1]<br>**57** - 5,700K, 70CRI[1]<br>**57H** - 5,700K, 90CRI[1]<br>**65** - 6,500K, 70CRI[1]<br>**65H** - 6,500K, 90CRI[1] | **GWC** - Wide Beam with Clear Glass Lens<br><br>Special Order:<br>**WC** - Wide Beam with Clear Polycarbonate Lens[1] | **GY** - Grey<br><br>Custom finishes are available. Please contact for details.[1] | **EN** - Fully Encapsulated | **AC** - 120-277VAC (50/60Hz)<br>**HV** - 347VAC (50/60Hz) |

## ACCESSORIES (Order Separately)

**Sample Number: JR-SM**

| ACCESSORY | FINISH |
|---|---|
| | |
| **JR-SM** - Surface/Suspended Mount[2]<br>**JR-HK** - Pendant Hook Mount<br>**JR-YM** - Yoke Mount[2]<br>**JR-YK** - High Vibration Yoke Mount[2] | **BLANK** - Stainless Steel |

**NOTES:**

*1. Minimum order quantities, additional costs and lead times may apply.*
*2. Only available in stainless steel finish.*