XCANLED-DC-HZ

rev. A1

KEY FEATURES

- Robust construction suitable for indoor and outdoor applications
- Available with a 6ft pre-wired or quick disconnect cable
- Available with 100° flood or 30° narrow beam profile
- Designed for use in harsh and hazardous locations
- Thermally managed for maximum longevity

TECHNICAL SPECIFICATIONS / MAXIMUM RATINGS

HOUSING	Anodized Aluminum
MOUNTING	Stainless Steel Yoke
VOLTAGE MAXIMUM	28 VDC
INPUT VOLTAGE	12-24 VDC
POWER (TYP)	31.6W @ 12 VDC | 33.6 W @ 24 VDC
CURRENT (TYP)	2.64 A @12 VDC | 1.4 A @ 24 VDC
CONNECTIONS	Turck MiniFast quick connect with 1.8 m (6ft) lead (Custom lengths available)
TEMPERATURE RANGE	-40°C to +45°C (Case ~20°C above ambient)
CERTIFICATIONS	Class I, Division 2, Groups ABCD, T3
INGRESS PROTECTION	IP66
COLOUR TEMP RANGE	**50**: 5000K | Special Order: 2700-6500K
CRI VALUE (MIN)	**50**: 70
TOTAL LUMENS	**50-W**: 1996 | **50-N**: 2334
LUMEN MAINTENANCE	LM-80 > 60,500 hrs (Based on CREE long term testing)
WEIGHT	2.05 kg | 4.5 lbs

** The ambient temperature during lifetime, lumen and chromaticity determination is 25°C ± 1°C.*

DIMENSIONS

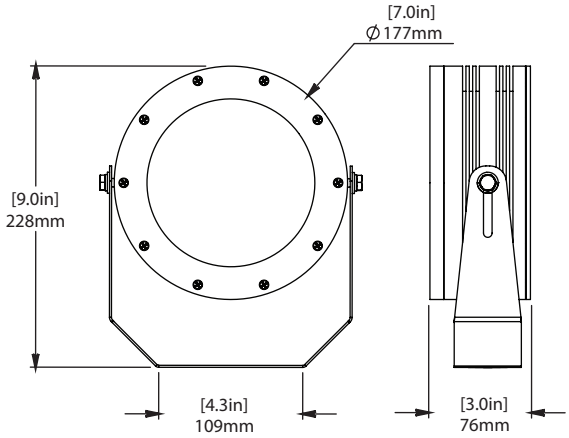

WARRANTY

Five (5) year limited warranty to the original purchaser. The warranty covers defects in materials and workmanship under normal use and service.

For additional information see: https://nemalux.com/legal

OPTIC OPTIONS

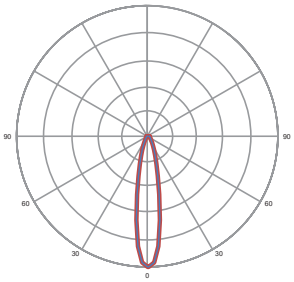

N - Narrow

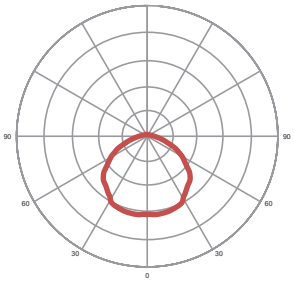

W - Wide

PHOTOMETRICS

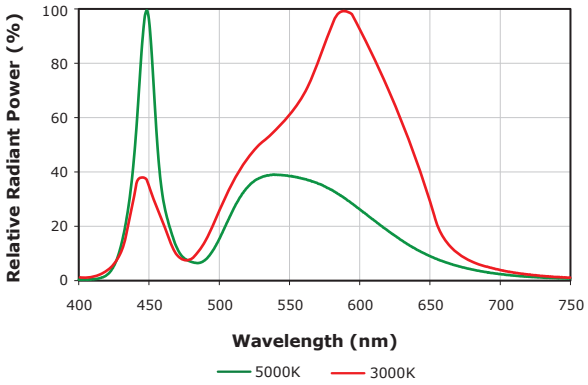

NARROW BEAM

WIDE BEAM

FROSTED LENS

MOUNTING

MOUNTING BRACKET

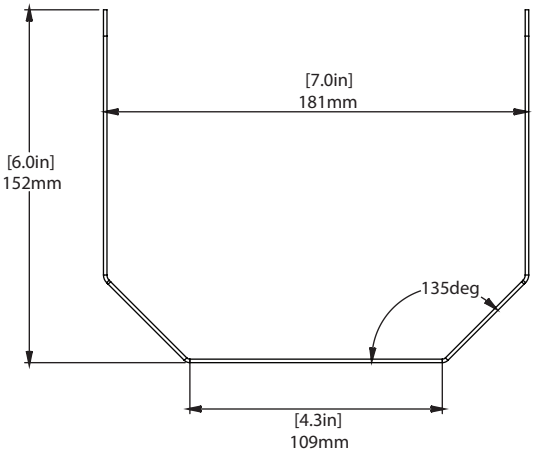

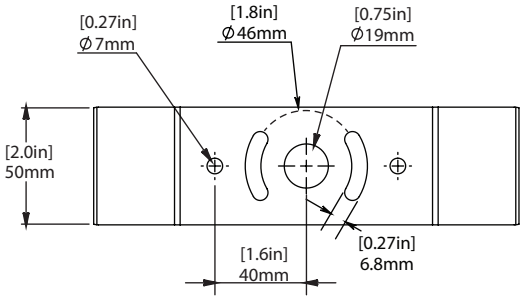

ORDERING INFORMATION

PROJECT NAME		TYPE
PROJECT LOCATION		
COMMENT		DATE
PREPARED BY		

MODEL SELECTOR

Sample Number: XCANLEDDC-50-WF-ALU-C1D2

MODEL	COLOUR	OPTIC	FINISH	LOCATION
XCANLEDDC -	-	-	ALU -	C1D2
	50 - Cool White (5000K) Special Order: **27** - 2700K[1] **30** - 3000K[1] **35** - 3500K[1] **40** - 4000K[1] **45** - 4500K[1] **50** - 5000K[1] **55** - 5500K[1]	**W** - Wide **WF** - Wide Frosted **N** - Narrow **NF** - Narrow Frosted	**ALU** - Clear Anodized Custom finishes are available. Please contact for details.[1]	**C1D2** - Hazardous Locations

CUSTOM OPTIONS

WIRING

Other wire lengths available in 30 cm (1 ft) increments.[1]

NOTES:

1. *Minimum order quantities, additional costs and lead times may apply.*